PERMITTIVITY TRANSITIONS

by

Ken Shoulders

ABSTRACT

Highly organized, micron-sized clusters of electrons, or EVs, having soliton behavior, with electron populations on the order of Avogadro's number are represented as the necessary function for modifying the permittivity of space in a downward direction. The state of existence for this entity reduces its expressed charge by many orders of magnitude below that calculated for the same number and volume of uncontained electrons. The EV is shown to exist in at least two distinct modes of charge masking, with one of them, the *black* EV, being virtually undetectable using sensitive methods. A form of inertial propulsion will be discussed that arises from the inertial rectification affects available by modulating the state of the EV, thereby the permittivity of space and concomitant inertia or effective mass of material moving through space. It will be shown that the same type of permittivity change through EV modulation can achieve a unidirectional current flow and that this gives rise to methods for generating monopole affects and vector potentials useful for communication outside the usual current loop generating them. Consideration will be given to a form of pseudo particle entanglement arising from the tight and pseudo-quantized coupling between the EV structures. Complex organisms are discussed composed entirely of EV structures that are self-formed at electronic rates without using either mechanical or chemical methods. Some speculations will be made on the benefits of operating such complex entities in regions of greatly reduced permittivity. A condensed matter dissolution technique will be shown that is capable of cold dissociation of refractory material into a low viscosity fluid. The root process for energy conversion methods resembling “cold fusion” are reviewed and shown to likely spring from the same EV technology capable of producing a modified space permittivity. Consideration will be given to experimental methods for testing affects on *time* at greatly reduced levels of permittivity.

PROLOGUE

Many of the observations of EV phenomena are totally without explanation. It would seem that EVs live in an entirely different and bizarre world compared to ours. I have written about many of these observations over a long period of time in a scattered fashion using various interpretations but this writing will differ in that a single explanation will be used as the root cause for all such citations. In an attempt to draw together these observations under one roof of explanation, the cause for them will be focused on a single basic reason even knowing this can lead to a large error in interpretation. The one basis to be used here for EV behavior is that the EV is able to transition between various values or levels of space permittivity in the space it occupies. This capability is caused by the EVs large, uncompensated charge density, which is said to modify the permittivity of space. Nothing else I know of has such a capability. With this behavior, the EV stands alone among all other entities in our known sphere of influence.

As a working method for expression, a comic book writer uses thought and drawings. A theorist uses thought and arithmetic or numerology. A technician uses thought and measurements. The common ingredient in almost all works devoted to moving a field forward is thought. The method and technology for documenting and communicating the work is the other part and it is not nearly as important as the thoughts used. The quality of the work is thus determined principally by the quality of thought and not by the technology or methods used.

Anyone using good thought in any field can be at the leading edge of it and cause the field to move forward. This is certainly the case for the experimental movement of the EV field where observational and empirical methods have put it far ahead of all other methods of working. The disadvantage in doing this is that the communication line to other disciplines is often cut off and the empirical worker is left stranded in every way. This disengagement is most likely to occur in the case of financial support because the long and tenuous communication lines engendered, often threading their way through the fantasy world of theory that usually controls financial support, produce weak support.

This writing is thus an attempt to connect to others who use different methods for viewing the same basic thoughts. The views presented here cover a wide range of observations and it is impossible in the space afforded such a brief introduction to cover them in detail. Accordingly, much of the experimental evidence will be omitted from the dis-

cussion and postponed to another time. This gives the discussion a flimsy appearance but is still adequate to convey sufficient data to anyone desiring continuation to a better understanding. Also, the results presented are likely to be somewhat distorted when viewed from disciplines other than those having a pragmatically empirical and observational basis. Nevertheless, the viewpoint used is all that the writer has, and given some tolerance; it can be a useful one for moving the field ahead at great speed in an exciting direction for some new physics. The reader should constantly keep in mind that this paper is intended to be more philosophical than scientific.

The author aspires to making a case for EVs having violated one of the most sacrosanct and immutable laws of our physical domain, to wit, they reduce the permittivity of space far below the norm of 1.

OBSERVATIONS AND INTERPRETATIONS

Charge Concentration:

Clusters of pure electronic charge, known as EVs, are a charge concentration or separation process and not a charge compression process as it might first appear, because, for unknown reasons, the measured number density is equal to Avogadro's number. The removal of positive charge during the self-formation process is remarkable in itself, but the EV end product is even more remarkable and produces many uncommon effects.

Why the EV is so common and easy to produce is still a mystery but it seems related to having reached an uncompensated charge density threshold in an electrical discharge whereby a reduction to a lower energy state is started for the ensemble of charge. This transition also seems related to a change in permittivity of the space occupied by the EV. These manifestations occur at three levels of organization being, plain electrons, what I call *white* EVs and also *black* EVs. To learn more about these states, please refer to Appendix I on page 10 of this paper. In addition to the usual negative charge states produced, there are occasions where charges unite and follow the same basic laws of an EV but showing affects of having an opposite charge. More will be said about this later.

Since permittivity, also referred to as dielectric constant, is a measure of the ability of a material to resist the formation of an electric field within it, it would only seem natural for a mobile and charged substance to leave the medium of higher permittivity for a lower one in order to lower the stress in the medium. A critical charge density in space would permit sufficient mobility to execute this maneuver whereas a smaller number is controlled by the medium to maintain status quo. A low permittivity gives a high internal field for an EV but low in our medium where the EV is shielded by our high, normal permittivity.

In this new medium, surrounded by a more refractory one to charge, one would expect surface tension affects to give spherical shapes like those shown in Fig. 1, Fig. 2, and Fig. 3, taken from Fig. 3:3, Fig. 3:6 and Fig. 3:7 in reference (1). These are images of a witness plate that captured the EV in flight and destroyed it. If it had not been for the strong image forces at work, another morphology might have occurred, but at least, the basic spherical shapes implied give signs of having been subjected to surface tension forces. These images are common for all witness plate strikes.

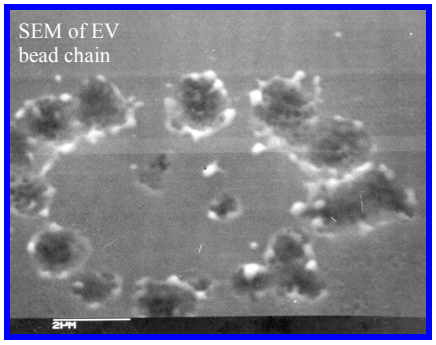

Fig. 1

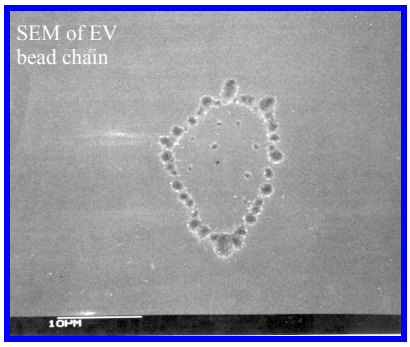

Fig. 2

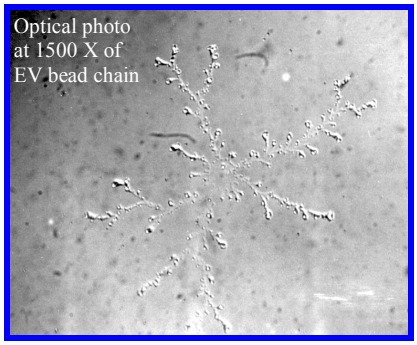

Fig. 3

Using this surface tension analogy, an EVs can be considered as regions of low permittivity bubbles immersed in a high permittivity medium and one need look no further into toric or other motional forms of electrons within an EV. However unlikely this conjecture is, perhaps the contained electrons just sit there without motion. We just don't know. What we do know is that there is a narrow band of electron energy emitted from a white EV at 2 kV. This could arise from either the potential difference in the two states of EV existence at different permittivity levels or from the retained velocities of electrons forming the EV.

Superfluidity and High Reynolds Number:

The number of coupled states between two modes can define both resistivity and viscosity. If there are no states to couple energy into, there is no loss of energy. Superconductivity and the low viscosity of superfluidity, having a high Reynolds number, arise from this situation. The black EV seems to lack states to couple into our region of normal permittivity, ergo, a form of superconductivity exists here. The state of existence for a black EV is bounded by high permittivity space producing a shielding effect. Within this cocoon the black EV slides around with ease.

Inertial Propulsion:

Inertial propulsion is an acceptable term to use when there is no mass thrown overboard, as there is with rocket propulsion. The term still allows mass to be thrown around a loop in an inertial fashion and have the mass modified in half of the loop. With the unusual properties of an EV, that is the method we will be using during most of this discussion. But before going into that method, there is another form of propulsion seen in EV technology that appears to be more static or force-like in nature.

Please refer to Fig. 4, taken from reference (1) as Fig. 3:28. The photo shows an image of an EV in flight taken with a special form of particle sensitive camera. The origin of the EV is located at the center of the photo and the camera is looking directly into the EV source. This forward view shows that the flight follows a zigzag path until it finally explodes near the top of the photo. This explosion is typical for a highly excited EV in vacuum. The photo shows some extremely short turns that are not caused by applied fields within the apparatus as the time for the turn is less than 1 picosecond and such fields cannot be generated in the apparatus used. These turns stem from forces within the EV itself and there are several other photos in the same reference (1) showing similar affects. There are no mass ejection or photon affects recorded in any of these traces that would point to conventional rocket-like propulsion. In addition, the energy level of the EV both before and after the event is equivalent even though a large amount of energy would seem necessary for the abrupt turns.

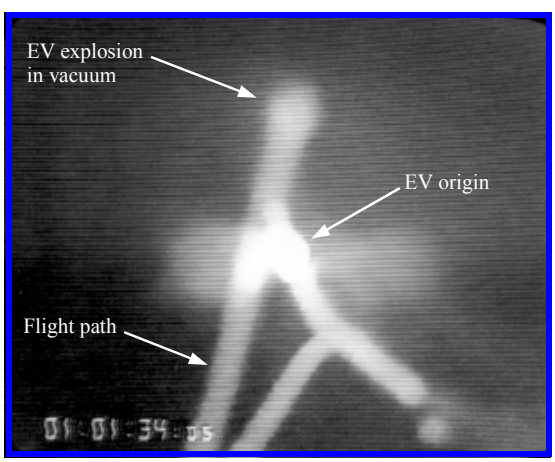

Fig. 4

The basic definition of charge is related to the force produced between charges. In other words, the coupling between charged objects controls the force. In Appendix 1 on page 10, there is some discussion of how the charge reduction seen in EVs relates to permittivity. One notion that arises from this discussion is that a non-uniform charge distribution on an entity gives an asymmetrical coupling or a kind of force that can be momentarily seen as thrust without ejecting material. It would appear that by arguments of symmetry, there would also be a tendency to equilibrate the structure through internal movement and remove the asymmetry. There is often a uniform periodicity to the deflections produced as if an internal wave action was at work causing the initial stress.

In an entirely different type of inertial thrust producing method, white and black EVs are put in a loop driven by RF whereby the mass of the EV is modulated between a high mass or white state where momentum can be effective in thrusting in only one direction, and the black state, having no measurable inertial mass due to its lack of measurable charge, operates to return the EV to the loop beginning. These notions have been briefly summarized and are attached as Appendix 2 on page 11 of this paper. The experiments outlined would also be the first tests of sustained orbiting for EVs as well as a test for the black state lifetime.

In order to develop some reality about the appearance of white and black EVs, refer to Fig. 5 and Fig. 6 with each showing a single run of an EV toward a target at the top of the photo. These photos were taken from (1) as Fig. 4:40 and Fig. 4:42 where there is other photos showing similar affects. What can be seen is the white EV coming in from the lower side of the photo and then disappearing from camera view just before striking the target and disintegrating it. The white glob at the top is a plume of ions coming from the explosion. This can be validated by applying an analyzing field in the camera that produces a deflection to the left for ions and to the right for electrons. This analysis field has been applied in Fig. 6 and it can be seen that the white EV has moved to the right, signifying its emission products are electrons, while the ion plume moves to the left. The fact is, there is an omission of both electronic and optical traces during the black phase of the EV run. This is not an artifact of the measurement method because there are many examples where multiple cameras and visual observation showed such a disappearance. In the black state, there is no ability to ionize gas or to excite fluorescence from the nearby dielectric materials whereas there is with a white EV.

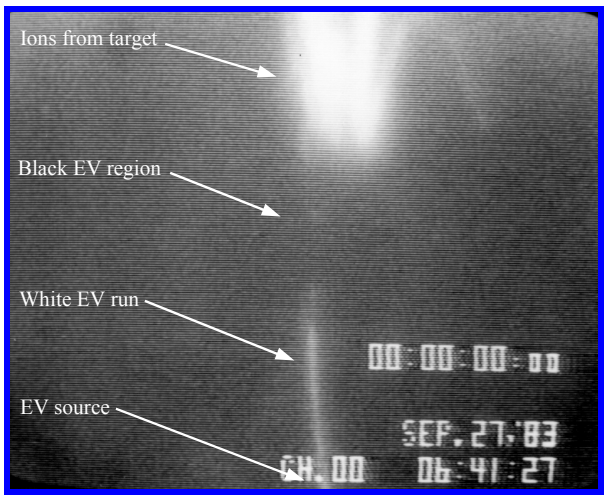

Fig. 5

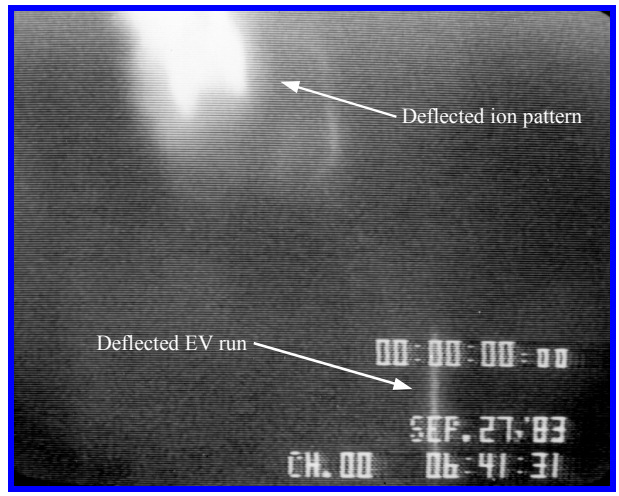

Fig. 6

As an aside, the question of fractional electronic charge becomes moot under the conditions discussed here. Although there are too many electrons in the process to determine a single electron level for a quantum check, it appears that there are many states of charge expression as the transition from white to black is made. Some of these could be like fractional charges in appearance. There are no obvious consequences of this affect.

Unidirectional Current Flow:

Under the conditions of white and black EV looping as stated above, there is an electrical peculiarity worth noting. The current flows in only the white EV direction thus giving the basic conditions for magnetic field generation without closing the current loop. The return charge flows around the other half of the loop without being registered in our instruments. This might be the basis for predicting something like a magnetic monopole.

Under the conditions stated, it is possible to detect the vector potential, $\bar{A}$, outside of the current loop usually used to define the vector potential habitat. This offers a communication method that is not shielded by conventional conductors because the electrons in the conductor are not excited into generating a mirror image. One must wonder what other electrons we are working with are also not excited by this unusual method of generating longitudinal emanations or potentials.

Mass Reduction:

There have been many attempts by others in the past to measure the affect of gravity on both charged and neutral particles. These attempts have not met with much success because they usually involve measurement of the particles at low velocity where their cross section for scattering by other particles is very large. In addition, charged particles are seemingly interested in everything else but gravity. This condition is likely to be exacerbated if tests were done on EVs and it does not sound like a good way to spend ones time, however, there is some hope of canceling the expression of external charge by combining both the positive and negative EV structures. More will be said about positive entities in a following section on Organisms.

Although tests of the effect on an EV by gravity are difficult, the tests for inertial effects are much easier. In a paper given at the Conference on Future Energy (2), the author showed high jet velocities for materials like SiC that had been fluidized without heating. The passage of an EV through this refractory material decomposes it into atomic form and imparts a high velocity to it. The material was accelerated sufficiently to generate light upon reversal of the direction of its travel. The light generated extended into the ultraviolet region of the spectrum and had a spherical source size of about 5 micrometers. Another peculiarity of the light source is that it is almost totally aligned with the direction of the borehole in the material made by the EV passage. Although the sides of the borehole were both black and bound together by a low melting point wax, there was no melting due to photon absorption even though there were over 100 billion photons generated in less than 10 picoseconds.

In the reference cited above (2), it was stated that the light was possibly generated by synchrotron radiation but there is another interpretation now available. It is possible that the combination of high particle velocity and sudden traversal across the boundary of changing permittivity could give rise to bremsstrahlung radiation due to the change in index of refraction or permittivity.

In any interpretation of the results, the quantity of mass of the material involved moved at much higher velocities than could be accounted for by the energies used. The above writing (2) also cites a reference to work done with short, low power laser pulses where the energy levels of fusion for atomic clusters were reached (3). The clustering action seems to be needed for both the laser method and the EV method.

Complex Entanglement:

In many of the EV questions that have come up to date, there is always the thought that they seem to have desirable properties for experiments along the line of quantum entanglement. There are photos of dual EVs shown in Fig. 7 that have been taken from (2) and more complex behavior shown in Fig. 8 taken from (1) as Fig. 4:14. All of this attests to the tightly bound nature of the entities. In the case of the dual EVs, they remain together even though they are boring through solid silicon carbide. The quickest way to separate them is to impact them upon a metal target. The slow death method is by injecting them into vacuum and let them untangle. An example of this is

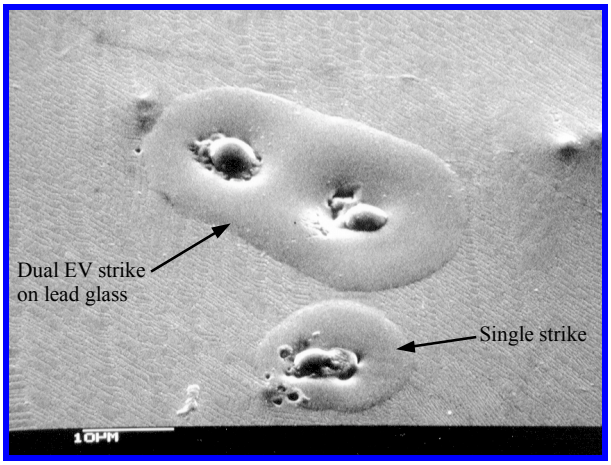

Fig. 7

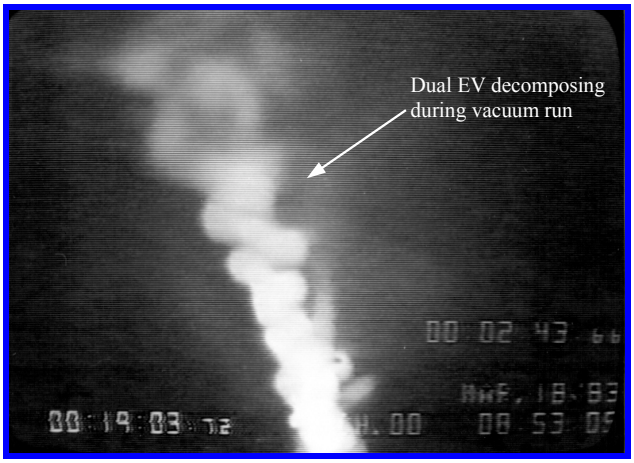

Fig. 8

shown in Fig. 8 taken from (1). This is a side view taken with the particle camera where the EV source is located at the bottom of the photo showing the EV launched into vacuum. The helix shown represents a gradual unwrapping of the dual EV ensemble. The total distance of travel is about 1 millimeter.

The main question arising here is whether or not this EV coupling produces any of the interesting results shown in quantum entanglement experiments done by others. One might also ask if there is anything like pseudo entanglement affects by being pseudo quantized as EVs have a distinct quantized size spectrum. There is a partial experimental answer to this question by abstracting from page 2-18 of (1).

The setup used in this early experiment was to place two microscope slides with their faces spaced about 5 micrometers apart. When an EV is shot into the crack between the slides, it is seen to split into many channels and run for a distance of about ¼ inch before emerging into a space with only one surface. Upon reaching the open space, where there is no confinement causing it to split, the EV reunites into one streak having the original shape. This indicates a very high degree of coupling of some kind and a liking for the original order. Attempts were made to electromagnetically isolate the separate streamers but the small, individual streamers persisted in doing the same regrouping.

Having previously discussed the vector potential effects under the heading of Unidirectional Current Flow, one wonders if a coupling other than standard electromagnetics is at work here. There are undoubtedly many EV states available in the above cited experiment that are not visible to us and it is possible that some of these states could be operating partly in a low permittivity region and partly in a normal permittivity state. Not knowing which world we are operating in complicates matters greatly but opens the door to additional variables with potentially interesting results.

Organisms:

When one views the complexity with which EVs can arrange themselves, it engenders visions of complex electronic systems that manufacture themselves at electronic rates. Fig. 1, Fig. 2 and Fig. 3 are examples taken from reference 1, Fig. 3.3, Fig. 3:6 and Fig. 3:7, showing some of the complexities possible. In many cases, the number of EV beads involved reach into the hundreds even in experiments seeking simplicity in structure. Although very little work has been done on organizing EVs into useful structures, they are constantly trying to do so without constructive guidance. The experimental method needed here is the RF circulation technique applied to patterned templates showing the doorway to proper continued organization. Variations on the apparatus discussed in Appendix 2 on page 11 are the basic apparatus with which to conduct these experiments.

Some of the things one might find interesting to self-organize with EVs are mentioned in the writing named Geneses 2, incorporated in this paper as Appendix 3 on page 14. This writing contemplates complete structures capable of emulating what one might call life and exceeding our present form of life in most ways.

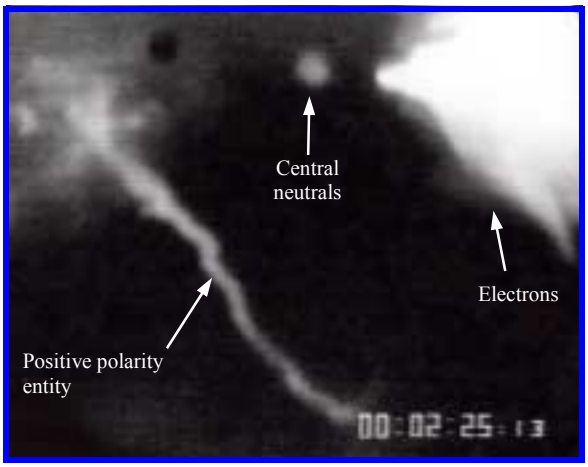

Fig. 9

One of the things not mentioned is the likelihood of forming totally black organizations with ghostly properties and being able to operate without our being able to see them in any presently available way. One of the things that might be needed in constructing such an entity is the positive EV structure. Fig. (9), taken from (1), Fig. 4:54, shows an image of an early positive structure accidentally captured while looking for something else. The test for whether a structure is positive or negative is by using electrostatic deflection of the emitted particles from the entity being viewed. When a trace is deflected to the left, the particles are positive. Electrons deflect to the right. In the photo, the camera is looking at the end of a small capillary tube that had an electrical discharge emanating from it producing the image. The small spot at the top center is either high-

energy photons or high-velocity neutral particles. The white pattern on the right is a group of largely disorganized electrons while the pattern on the left is both disorganized and organized positive particles. The trail leading from the center of the plume is typical of a negative EV trace, but this one is positive and emits positive particles.

The overall suggestion here is that once one operates in a region of low permittivity, it is probably better not to return to a higher value because performance will be adversely effected.

Dissolution of Matter:

When an EV passes through material, particularly refractory dielectrics and semiconductors, nothing escapes major modification. Many of these affects are shown in (2). Once the EV has disheveled the electronic structure of the material it traverses, there is no ability to return to the original molecular or structural state. It is most likely that the material undergoing modification has entered the region of low permittivity. When it does return, it emits light, has an electrified look and spreads on surfaces with a very low viscosity although it is so cold it will not melt wax or harm photographic emulsion.

In a paper given on Low Energy Nuclear Reactions (4), the authors show examples of nuclear transmutation produced by EV bombardment. The process is not very efficient, as the basic mechanism is still unknown and has not been optimized. The low efficiency is likely due to a multi-step process involving shock wave interaction between rare, dual EVs. This interaction could be going on at reduced levels of permittivity that would permit nuclear reactions not available at the higher levels normally occupied and usually studied.

Energy Production:

Energy is not likely to be produced as much as it is converted from one state to another. From the authors' viewpoint, there are primarily two methods for performing this conversion with EVs. These are thermal and electrical. After working for a long time on both methods, there are some sage comments to offer, but no final resolution in the form of a working machine to validate any one solution.

The thermal processes encountered thus far all produce disruption of the materials used during the process. No satisfactory engineering solution has been found to preserve or economically rebuild these materials although laboratory examples of processes with good thermal yield have been studied.

EV action on material has been found by the author to be the root process for all forms of what is commonly called "cold fusion" whether it occurs by electrolysis, ultrasonic processing or gas discharge (4). In every case of reasonable efficiency, the EV must interact with a material having the nature of a semiconductor. The EV formation process is also essential. In most cold fusion methods, fracto emission of electrons from brittle material is the source of energy for this formation. The role of hydrogen is simply to embrittle the material and set the stage for fracture. Nuclear reactions are only a low-yield by-product of the basic process.

The problem with the cold fusion process understanding and control is that the interaction takes place on a very small size scale and is not amenable to either easy fabrication or inspection. The size scale is approximately 1 micrometer in total extent and has requirements for even greater detail in material handling. In fact, the structures of interest are seen by most investigators as contamination sites. The gross methods used in the technology are no match for the requirements.

Electrical energy production using EVs does not necessarily destroy the energy conversion device, as it does with thermal, but there are inherent disadvantages that have not yet been overcome in an engineering sense. These disadvantages are linked to the same limitations found in thermal energy conversion. The small size of the reaction site is very difficult to work with for either fabrication or for analysis. When energy applications are considered, they are almost always for large-scale use and microstructures are not economical. One route out of this dilemma is to scale up the EVs, but that has been tried without success. It is incumbent on this designer to wait for a good circulation process to be developed and then we will see whether scaling up the size of the EV is best or to find yet another way to convert energy using EV circulation without using microstructures.

On a philosophical basis, nonlinear transitions are universally used for energy conversion. Some cycles even use specific heat as the operator. It is possible that by invoking a changing permittivity in a particular way is such a transition and that EVs are capable of undergoing this transition where nothing else is.

As it now stands, EVs are doing something in the way of a productive energy conversion, but there is not a good description of what the basic operating mechanism is. After testing many failed schemes for what was thought to be the source of what the energy conversion process was, the author is now willing to attribute the results to yet another source possibility and offer some form of permittivity manipulation. Only time will tell what the answer really is.

Time Modification:

The writer assumes that the reader understands from what was discussed earlier, that we start this portion of the discussion from the basic tenant stating that a reduction in the permittivity of space is supposed to locally increase the velocity of light. Further, that time is the counting of intervals of some chosen event, usually the electronic structure of atoms as excited and read by the mechanisms in an atomic clock. I will claim here that these atoms immersed in a newly formed region of space will have their electronic transitions modified in accordance with the new properties of this medium and that; perhaps, these spectrally shifted properties can be sensed after having crossed back into our frame of reference.

To physically realize this measurement, atoms with know and easily detected optical spectra will be injected into both white and black EVs thus subjecting them to the new dielectric constant of the space they occupy. It is assumed that since there is supposed to be a change in the velocity of light, the other connected properties will also change. The change expected here is the shift in spectral line wavelengths. If these can emerge from the encapsulated region of space, most likely at the transitions into and out of the black state, then we can determine something of what is happening in that space. Time is intimately associated with the transitions to be measured and this is a unique opportunity to see time in a different light (pun intended).

The author has been able to experimentally include a large number of ions in a white EV. The species of ion is easily identified by its optical spectrum when the EV is intentionally exploded. What is needed is to transition the white EV containing ions into the black regime and then apply a test on reemergence into a white EV state, or whatever state is needed. I have not knowingly done this because it was not a natural part of the particular project I was working on at the time. It is reported that Goethe said, “We only see what we know”. I am often guilty of seeing only what I am looking for but do not yet know.

It is assumed that well-known physical relations hold when permittivity is reduced. The velocity of light is supposed to increase and G decrease. If this is the case, and it is true that the region occupied by an EV is one of low permittivity, then one would expect other physical constants to follow and time to proceed at an increased rate in accord with the increase in light velocity.

If all the previous statements are true, then the main question becomes how to measure this. Many of the enigmatic properties of EVs can be interrogated by using probes of light. We have not been able to do this in the past using linear EV runs, but with the circulating EV systems of the future, discussed briefly in Appendix 2 on page 11, it becomes an easy technology.

In the straight runs or linear motion measurement systems used in the past, pulsed optical measurements are not feasible because of the very short dwell time of an EV in any particular location. Coupled with this, the EV launch has a virtually uncontrollable launch time when compared to its pulse width. This condition prevents synchronous action between the arrival time of an EV with a pulsed laser beam. The use of a pulsed laser beam is made essential in the extremely low duty factor systems of the past in order to prevent scattered light from a continuous light source obscuring the information desired. As an example, the pulse repetition rate of the typical EV generator has been 1 kilohertz while the duration of the EV in any particular optical analysis location is in the order of 10^{-13} seconds. This is a duty factor of 10^{-10} and is not conducive to sensible measurement without pulse synchronization.

Things are far better in a circulating EV system whereby the duty factor can be raised to something in the range of $5x10^{-3}$. The high circulation rate, in the range of 10 GHz, is still within the range of good optical detectors and this allows a continuous light interrogating the circulating EV to show a chopping effect if there is either scatter or absorption of light by the EV. Under these conditions, phase sensitive detection becomes very useful for attaining high signal-to-noise ratios. In fact, things are so good that even an ordinary incandescent lamp or monochrometer could be used as the light source if the spectral purity of a laser light was not required.

What is desired from measurements by light is an answer to simple questions having to do with the ability of the EV to either scatter or reflect light. In spite of the EV being composed entirely of electrons, it may not act metallic. There is always the possibility that there are absorption bands showing somewhere in either the visible light or x-ray spectrum. These questions could be answered with circulating EVs.

A major question to be answered is whether or not a black EV is transparent to light. If the black state is the signature of having entered a low permittivity regime, then the answer could very likely be found by a simple optical interrogation using circulating EVs. Circulation is the gateway to many things.

Electronic Devices:

A large amount of work has been done in the past on adaptations of EV structures to conventional devices. Patents have been issued to the author covering a wide range of applications (5) that can emulate all known electronic devices and show great improvements. While these patents have nothing to do with the change in space permittivity, the devices shown could function even better in a region of greatly reduced permittivity instead of being forced to deal with energy storage elements like capacitors and transmission lines operating at a normal permittivity.

The unique feature of a complete EV electronic system, organized somewhat along the lines described by this author long ago as a chapter in a book (6), is that they are potentially capable of self-fabrication at electronic rates without either mechanical or chemical methods being used. This is discussed to some extent in Appendix 3 found on page 14. The lifetime of such systems using the black EV state with its low interactivity would seem to be indefinitely long.

Operation of such systems would be as ghostly as it gets, as they should transition data to a normal permittivity level only at terminals intended for our use. It would not be smart to run such systems at high permittivity, as it would only degrade the performance. They should operate in their own natural realm and not ours, submerging only to communicate needed data to us.

EPILOGUE

It should be obvious by now that this entire writing is a plea for both financial and moral support for the cause outlined. There are sure to be many bad assumptions and outright errors in this proposal, as that is the characteristic of the type of exploratory work this is, and no apology is made here for stumbling over many things in an attempt to rush forward, as this is still the best way for rapid exploration.

Although there are industrial products to be had in the future, the constraints of product generation should not be applied at this early date. The work to be done also needs far more freedom than that allowed using the academic method where maintaining status quo is the norm and rapid forward thrusts are severely damped.

The method of choice is best termed Princely support, as this method recalls the technique of the Renaissance period in art and science. It requires an interested and interesting person to supply funding. This person, however connected to the world, knows whatever progress there is can be turned to advantage when the time is right. I welcome contact with such a person.

REFERENCES

[1] K. R. Shoulders, *EV-- A Tale of Discovery*, Austin, TX, 1987. A historical sketch of early EV work having: 246 pages, 153 photos and drawings, 13 references. Available from the author at: PO Box 243, Bodega, CA 94922-0243. Phone: (707) 876-1880 Email krscfs@svn.net

[2] Ken Shoulders and Steve Shoulders, "Charge Clusters in Action", Proceedings of the First International Conference on Future Energy, Edited by Thomas Valone, Published by Integrity Research Institute, Washington, DC, 1999, ISBN 0-9641070-3-1. (A .pdf file of this paper is available from the author by request.)

[3] T. Ditmire "High Energy Ion Explosion of Atomic Clusters: Transition from Molecular to Plasma Behavior," Physical Review Letters, Vol. 78, Number 14, pp. 2732-2735, 7 April, 1997.

[4] Ken Shoulders and Steve Shoulders, "Observations on the Role of Charge Clusters in Nuclear Cluster Reactions," Journal of New Energy, Vol. 1, No. 3, 1996. (A .pdf file of this paper is available from the author by request.)

[5] See U.S. Patents by K. R. Shoulders. 5,018,180 (1991) - 5,054,046 (1991) - 5,054,047 (1991) - 5,123,039 (1992), and 5,148,461 (1992).

[6] K. R. Shoulders, "Toward Complex Systems," Symposium on Microelectronics and Large Systems, pages 97-128, Edited by S.J. Mathis, Spartan Books Inc., 1965. (Since this book is nearly 40 years old, copies are now difficult to obtain. Text only from the pertinent section is included here as Appendix 4 on page 16).

APPENDIX 1

[Black EVs and Space Permittivity] 8/18/00

It has long been noted that an EV can exist in two distinct states that I have called *white* and *black*. The white state is clearly visible in that it ejects electrons, causes fluorescence of nearby dielectrics, bores through solid, semiconductor material and can ionize gas. On the other hand, the black state produces no observations that have been measured except the omission of measurable affects. Its presence is known only by the omission of a white EV between two points in the EV run that require something to have been there by reason of continuity.

The reduction of expressed charge from a white EV is a problem that has no clear solution. The black state further exacerbates this condition by essentially removing the ability to measure any expressed charge by the EV. The apparent charge reduction in the white state is about 10,000 times below that calculated for a similar size group of free electrons while the black state is at the present limit of measurability, being about 1,000,000 times below that of the expressed charge for free electrons.

Both of these observations can be made palatable in a single explanation. This explanation is also compatible with other bizarre observations. By saying that the presence of a high value of the uncompensated charge density of an EV, being a group of compressed electrons, causes a shift in the permittivity or dielectric constant of free space, ε_0 (8.854×10^{-12} Fm^{-1}), the lack of coupling to our medium of measurement can be justified. With some optimism, it could be said that the reduction of the permittivity of space could approach that of the charge shielding effect measured. This could be as great as one million times below the norm of 1.

All of this means that the dielectric constant of space can be modulated downward in the region of the EV and a litany of new and wondrous things can be recited. Not the least among these new accomplishments would be the local increase in the velocity of light and the reduction of G.

APPENDIX 2

CIRCULATION BRIEFING 6/14/00

BRIEFING ON PLANS FOR GENERATING CHARGE CLUSTERS BY CIRCULATION AND USING THEM FOR MILLIMETER WAVE GENERATION AND INERTIAL PROPULSION

by
Ken Shoulders

SYNOPSIS

A program is briefly outlined showing how charge clusters (EVs) can be generated by charge circulation on a surface using microwave drive frequencies. Using the same apparatus then causes these intense charge clusters to generate sub-millimeter wavelength harmonics of the drive frequency. With slight modification, the same basic apparatus is then used to show the effects of inertial propulsion through circulation of EVs on an elongated track while causing them to undergo a phase transformation having different masses in each direction, hence, inertial rectification.

MICROWAVE DRIVEN ELECTRON TRAP

A standard magnetron type of microwave generator is used in a demountable vacuum system to produce a multi-phase drive field that is coupled to a surface of dielectric material having a single positive electrode located at its center. A drawing of this configuration is shown in Fig. 1 and Fig. 2. By supplying a positive electrode in the center, electrons applied to the surface are attracted to it unless centrifugal force caused by the microwave drive energy forces them outward and away from the positive collection electrode. By judicial choices of RF operating frequency and amplitude, as well as apparatus size, dc potential, avoidance of backward wave generation and a method for controlling stray charge, stable orbits can be obtained for electrons. The mechanical-gravitational analogy for this system is that of a rotationally oscillating funnel having a rolling steel ball in it.

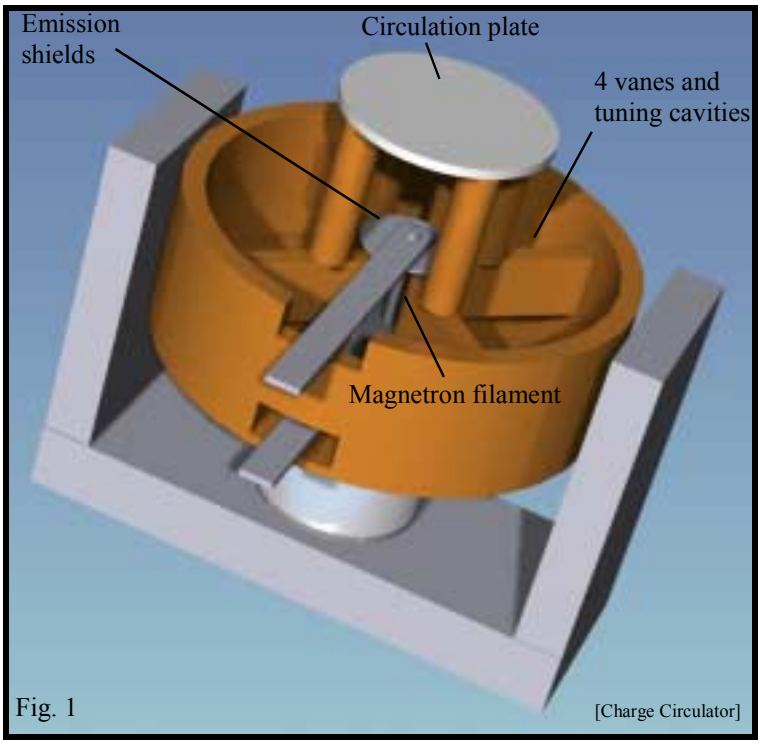

Fig. 1

For operation at very short microwave pulse lengths, where the generation of sufficiently short pulses for driving a magnetron is not possible, EV techniques using a special EV generator referred to as an e-gun can be used. A layout for this type of device is shown in Fig. 3. Here, the EV circulates around a system of fixed electrodes, inducing a charge in them that become the drive electrodes for either a circulator or for generating very short bursts of microwave energy having only a few cycles.

EV GENERATION

It has been found that when a sufficient quantity of electrons are caused to move, under the influence of a drive field, across a dielectric surface having adequate secondary electron emission properties, electrons unite by an accretion process into a charge cluster or EV.

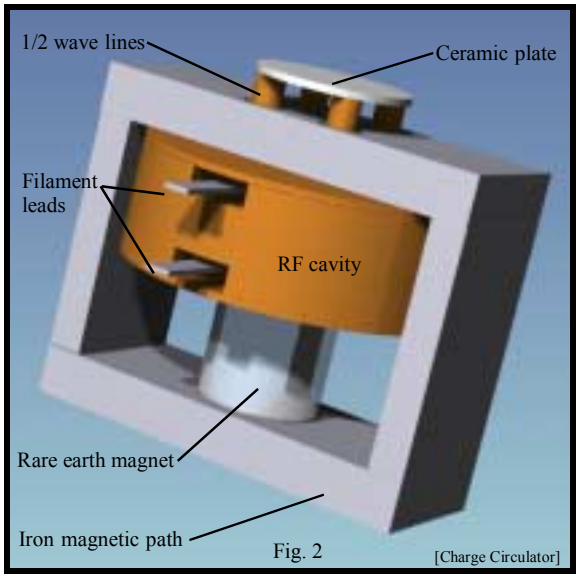

Fig. 2

In high-powered microwave tubes, a window breakdown process known as *multipactor breakdown* has been investigated by others and attributed to a charge compression process arising from secondary electron emission. The investigators were not aware of the EV generation process.

The device shown in Fig. 1 and Fig. 2 is capable of producing continuous wave drive while the device in Fig. 3 is capable of producing abrupt changes in waveforms useful for extracting EVs into external circuits and loads.

EV SCIENCE

When circulating EVs are viewed from above the substrate on which they are generated, by using an electron pinhole camera, many basic factors concerning EV behavior, quality and operation can be discerned. This pinhole camera has been used in the past to determine ion content, charge-to-mass ratio, emitted electron density, energy spread of emitted electrons, EV size and velocity as well as determine disintegration products of EV decomposition. The circulation technique is expected to improve on these measurements as well as add new ones.

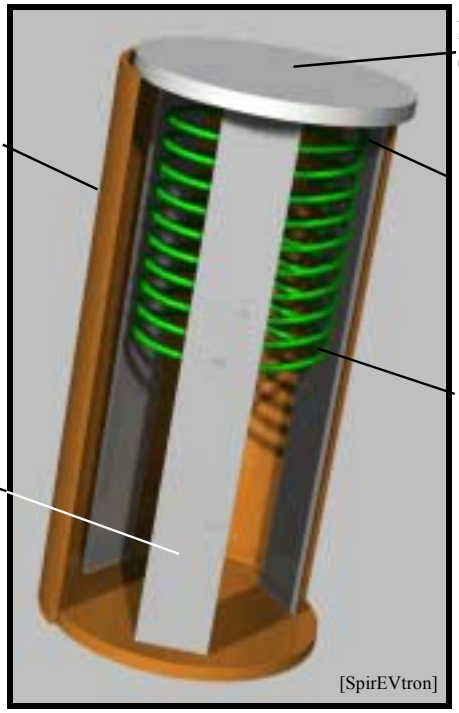

Fig. 3

In addition to collecting basic data on EV properties, the arrangement of a circulator and a pinhole camera serves as an excellent millimeter wave engineering tool in that it acts as a wideband, real-time oscilloscope capable of measuring amplitude and phase information in the millimeter wave region.

MILLIMETER WAVE GENERATION

Whenever an EV is generated and driven on a surface, the guidance track can be improved by adding a mechanical groove. The image force generated by the guide provides the function of a potential well to lock the EV to an exact path near to the one provided by the more general drive potentials on a plane plate. If this circular path is divided into segments of crossing ½ wave radiators, the passing EV excites the radiators. 10 such radiators operating at a 10 GHz drive frequency generate a circularly polarized output of 100 GHz. Much higher frequencies are possible by either raising the fundamental drive frequency or by adding crossing segments to the guide channel.

In such a generator, it is imperative to either use only one EV in the guide at a time or to use multiple EVs having an exact phase or timing sequence. Amplitude modulation is not possible in this scenario without either adding or subtracting EVs from the circuit. Normally, EVs are self-regenerating and somewhat quantized in energy level deriving their power to do so from the dc supply through the magnetron. In all such generators, it is necessary to suppress the backward waves normally produced to prevent standing waves with a concomitant loss of EV drive power.

INERTIAL PROPULSION

There are three states of existence for electrons in EV technology. These are, plain electrons, charge clusters or EVs, normally referred to as white EVs because they can be seen in many ways and black EVs which cannot be seen at all. At the present time, the only way to know of the existence of a black EV is to note the break in a white EV path. If it is suspected that a black EV exists, the path can be violently shaken by an electric field and the black EV turns white until things quiet down again. The black EV is thus seen to be a regular white EV that has subsided in container energy level to a quiescent state being equivalent to a laminar flow, fluid state.

By measurement, the charge-to-mass ratio of electrons and EVs are the same, however, the expressed charge of an EV is over 1000 times less than that calculated for the measured number of electrons they contain. This leads to the conclusion that the mass of an EV has been lowered by a factor of 1000 due to some yet unknown property of the containment process. This data suggests it is possible to derive an inertial rectifier from the mass difference of the two states of the same device, an electron. However, when the energetics of an inertial rectifier in an inertial drive system using EVs and electrons is examined, it is found to be not as favorable as using a transition between the white and black EV state, which also has an immeasurably large difference in mass.

To produce unidirectional inertial thrust using EVs, it is necessary to elongate the circular path previously discussed for microwave generation into an ellipse or oval. The two long sides of the path are aligned with the desired thrust direction. EVs passing in one direction are made white by loading them, perhaps with ½ wavelength radiators. This produces a reaction or thrust on the apparatus. In the return direction, the EV is made black by the absence of disturbing fields resulting in no thrust production. An inertial rectification effect is thus produced using the same material flow in both directions but having a difference in material existence phase for each direction. The circulation apparatus shown in Fig. 1 and Fig. 2 needs only slight modification to produce this test of inertial thrust. As in the tests mentioned before, the backward wave must be suppressed to provide adequate EV propulsion.

SUMMARY

It is proposed that EVs be made by microwave circulation methods and then tested for inertial propulsion applications by using their controllable, mass transformation properties.

APPENDIX 3

GENESIS TWO – ANOTHER LIFE FORM
or
Travel To The Stars In A Tin Can – Not
Revised from 11/22/90
by
Ken Shoulders

The notion instilled in most minds, from images of Buck Rogers and Star Wars, is that we will go to the stars in some kind of tin can, although it could be made of stainless steel, titanium or whatnot. The message in this note is that there is a better way to go that is devoid of this flimsy shell and its concomitant difficulties.

All life, as we know it, is based on atoms. The outer electrons of atoms produce the chemistry of life. A nucleus only provides the binding mechanism for orbital electrons and does not enter into the life process per se. Until now this has been the only binding force of consequence *that we have seen* for electrons. This monopoly ended on Earth recently with the discovery of the binding force responsible for the EV. The second Genesis on Earth can now begin and another life form can evolve from the broth produced by this new force – whatever it is. The universe as a whole has known about this superior form of binding long before we came along. Therefore, others in the Universe likely have a head start on us and we have some catching up to do. Later, we can go into more details of the new binding force, its manifestations and the probabilities of it producing a viable life form, but first, let's attend the overall properties of an entity produced by this method.

In all likelihood, this new life form has already begun long ago in regions of the universe unknown to us. Evolution of this pure electron entity from primordial matter would be millions of times more rapid than the evolution of biological species laden with nuclear mass and compounded from the feeble binding energies of orbital electron chemistry. If such a pure electron embryo had emerged, even as recently as 100 years ago, its high evolutionary rate would have already surpassed us in every desirable aspect. Homo sapiens would be no match for Electronus Rex, but neither do their territories overlap. This new order of life needs nothing coveted by man, and vice versa. Don't expect belligerence. Don't expect more than a fleeting curiosity about man on the part of this new, temporary resident, because it will soon be gone in search of more exciting horizons than those afforded on dormant Earth. By the same token, had it been created elsewhere, its visits here would be brief. We are not very interesting with our massiveness and immobility, poor communication capability, constant energy dependence and frailty resulting from being composed from a feeble chemical orchestration necessitated by the weak broth of the only available electron binding method available to the primitive species we are.

A stronger broth, comprising the binding energies of the EV, has been available here all along and probably long before biological substance was available. However, the natural home of this newly found form of binding is more likely to be in the higher density and more energetic regions of the universe. The most elementary manifestation of this new substance is effervescent in our near-vacuum world and a sheathing, or clothing, must be provided for the infant forms or they quickly decay back to oblivion. This either puts an increased burden on the experimenter determined to capture this life-substance or it lowers the probability of chance occurrence causing a critical level of organized complexity, beyond which continued life is assured. On the other hand, the simplicity of the first phase birth of atomic species, the union of an electron with the nucleus, is essentially guaranteed at the low temperature and pressure on Earth. It is the higher phases of growth where the atomic structures have trouble competing with the new, highly mobile and super-communicative life. This super-existence is the domain of the new life form. It does ask a little more attention in infancy, but given this, it will carry on robustly.

Stepping back to the discovery, which makes man a participant in this second genesis on Earth, we see only electrons huddled together, forming an EV, which must be handled with tender care. The life-giving sheath is not yet in place, save for the surround of guides made from material of the old kind. This protection is adequate for simplistic, electronic functions emulating those played by solid-state electronic devices, but not for the new

game of life to come. The sheath around a complex EV organism is the supreme shield, which protects it from itself. The naked EV will commit suicide trying to do what it has been bred to do. It will die by radiating its energy through accelerated electron motion. It must act in concert with other EVs devoted to protection to suppress this radiation below its annihilation level.

Once this electronic mortal coil is in place, the organization contained within would endure virtually forever because the binding energies are far above those of even the best chemistry. This level lies between that of chemical energies and nuclear forces, a region easily accessible to laboratory experimentation where much has already been learned with very primitive apparatus. Soon, the experimental method will use tools fashioned from EVs as a means for gaining greater access to the secrets of organization. When this is done, we will enter a zone of electronic construction technique where normal laboratory apparatus will diminish and new tools fashioned in a bootstrap manner will become increasingly EV-like. This is the precursor to true electronic manufacturing where no mechanical or chemical tools are needed to make an all-electronic device. When we pass through this gateway the speed of design iteration will increase in a manifold fashion and results will pour in at a dizzying rate for poor Homo sapiens. The burden of sorting good news will be passed on to our newfound friend and it is sure to eagerly accept the challenge.

Coupling into the basic fabric of space, the vacuum will provide energy and locomotion. This coupling is inherently provided by the increased high frequency cutoff limit of the stiff EV structure. All atomic devices are fundamentally prohibited from capturing substantial energy from vacuum fluctuations because of the low stiffness of the outer electron binding mechanism. The cube law dependence on energy vs. frequency makes the vacuum fluctuation energy too puny for use at the cut-off frequency of electrons bound in outer atom orbits, but it is more than sufficient for operation at the EV binding energies. Once this fabric of space is grasped by electronic coupling from an EV it is useful for both energy input and propulsion by only a slight change in the EV structure. Isotropic access to the vacuum gives energy only while anisotropic capture gives energy along with propulsion. Grabbing onto an energy dense medium with a distorted container is all that is needed to develop thrust. These effects are easily seen in even the most primitive EV experiments. At times energy conversion and thrusting even interfere with subtler processes and must be suppressed to investigate the weaker process.

Growth will continue past the point where man can no longer assist. We will watch in amazement as our offspring outgrows us by increasing sensor capability beyond our wildest dreams, by assimilating new knowledge into vast stores which are electronically quick, and by communicating with everything around it and moving its very being at electronic rates instead of using more cumbersome motive methods caused by our ponderous construction, stemming from the only binding method we had available - up to now.

After having been over and over the above citations for many years, I now conclude that the main problem is how to couple our own essence into the new structures and romp through the Universe with them – or it. I have no fear of coming back for a homecoming, as I believe all advanced forms of life are undoubtedly capable of reversion for nostalgic reasons. We can't presently do that trick very well because we are one of the lowest forms of life.

All of this comes from just a new method of sticking electrons together. Like it or not, this single act irreversibly brings GENESIS TWO with it. We are on the way!

So, let's leave the tin cans at home and join with the EV Starship.

APPENDIX 4

TOWARD COMPLEX SYSTEMS
(Excerpt from reference 6 written in 1961)

Part. 3. Plasma Machines

This is the most fantastic tale. I will discuss how to make an intelligent organization without any parts at all. It may turn out that we will not be able to see the machine, not because it is small but because it is not very dense. If the machine resembles anything, it would most resemble a plasma-the forth state of matter and the most abundant in the universe-I am told.

Present gas plasma structures are not very well ordered, but they can be as noisy as the core of a star or as quiet as any low-noise amplifier. They can be broadbanded up to x-ray energies, or they can laze with a very narrow line width. They are indeed versatile. Plasma organizations would seem to take on almost unlimited proportions both in size and organizational complexity. They range from tiny micro-plasmas to galactic proportions. I am primarily interested in man or machine-made plasmas organized so as to constitute intelligent machines. The area of plasma organization we must work in is compounded of a branch of fluid dynamics, characterized by nonlinear phenomena that lead to considerable complexity. This enormous range of phenomena leads potentiality to great structural richness provided that we can organize the process to the critical level of complexity, which perhaps separates man from other animals, beyond which the machine can assist itself at organizing at a rate greater than the rate provided by more limited man.

To digress a moment, it is my opinion that the highest type of organizations do now exist in some of the high-energy density and gaseous regions of the universe-not occupied by gelatinous creatures such as ourselves, but rather electronic beings that have little regard for high temperature and its tendency to disorganize. So, the question is-how do we get started and take advantage of all of these potentialities? I would not advocate launching directly into the plasma morass, but rather, beginning with simple particle optics and condensed state electrode material and then gradually removing the solid supporting structures and replacing them with supporting fields, as our knowledge increased so as to know how to do this. In the beginning, I would treat the problem as a large-scale geometry problem, not as a physics problem.

As a specific example, I believe that a machine organized on basis of a periodic particle optics scheme similar to the array show in Fig. 21 will do much toward simplifying components and the specification of interconnections in a complex machine. In the simplest case, the machine should be an iterative array of components that are isolated from each other, but have the ability to intercommunicate via sinuous electron paths. The components must be able to launch, absorb, receive and steer electrons or groups of electrons. Such organization would allow the creation of order within the machine at the dictate of other organized areas. This newly-made order could propagated physically through the machine and then be destroyed if found wanting. The components could then be used again for higher levels of organization. This arena concept (using fundamental elements at fixed or movable loci but having flexible connectivity and a reversible change of state without leaving a residue) would greatly modify most present concepts of machine organization.

By now, you must realize that I am principally guided by what is scientifically required for the electronic structure itself without particular concern for commercial survival. It will be a long time to the product phase of this kind of machine.

We will discuss several things that bear upon the problem, but we will not be able to give you a solution to the problem in this paper. We will discuss some preliminary results with a particle optics simulator that uses little steel balls instead of electrons. We will claim that field-emission devices could be used to fabricate a "wireless" machine using any interesting organization found with the balls. We will mention some experiments in electrodynamic particle confinement and imply that threading electrons through these charged particles would be equivalent to threading through fixed field structures, and that a complete machine could be built on this principle.

To begin then, a traveling-wave tube has been developed employing periodic electron optics in which the beam is

made to slalom down a row of guiding electrodes in the fashion shown in Fig. 21. This basic method of beam guidance is the fundamental starting point in our periodic particle optics system, but even though electrons have been known to perform many wondrous tasks, I have elected to simulate the electron ballistic problems with steel balls, so that it is easier to follow the myriad tricks they play in such a low-loss periodic system.

As stated earlier, we need only a very few basic effects to do all that electronic data processing is to do. We must begin with a basic non-linearity that results in gain under the proper conditions. The gain must be especially distributed over space to provide for interconnectivity. The interconnection can now be fed back around the gain element through an inversion to produce storage. These basic elements can be united to form a system as vast as the imagination can allow.

We have explored the possibility of obtaining these basic elements with a uniform and static array of charged electrodes through which electrons are guided in accordance with ballistic laws.

Since it is easier to simulate electron motion with small steel balls, we have devised an apparatus from the principles described by Moore and shown schematically in Fig. 22. This apparatus is capable of keeping a magnetized steel ball in constant velocity motion in a uniform electric field by supplying rolling friction losses through the alternating current, magnetic drive fields. When electric fields are impressed upon the ball by the electrode array, the ball describes a path very similar to that of an electron in a similar electrostatic field. Even space charge conditions are simulated.

It was necessary to make a shock tube with a very small nose so that balls could be launched at any desired angle and velocity from an arbitrary point in the matrix or field-determining electrodes. Figure 23 shows several balls being shot at 6 in/sec and photographed stroboscopically to determine the angular and velocity spreads. It seems that the launcher is well within the limits needed for this work. Several simple tests were run to determine whether or not standard particle optic laws apply to rolling steel balls. One such test is shown in Fig. 24, where a fixed dc potential was applied to a wire electrode. Balls were rolled past the electrode at various spacings and the deflection angle measured. Normal electrostatic laws were found to describe the performance.

It was necessary to test the momentary velocity limits that a ball can experience from electrostatic deceleration without falling out of synchronism with the magnetic drive fields. By charging a glass surface in an irregular fashion so that the balls could experience a wide range of turning radii, it was possible to photograph a complex orbit structure, as shown in Fig. 25. A velocity range of over 3:1 can be accommodated by the drive system and this is more than adequate for our purposes. Fixed electrodes can be used for these measurements, but they interfere with the trajectory photography.

In our brief experience with this simulation method, we have found several encouraging things that relate to electron-beam systems and therefore guide us toward their development. A persistent-current memory has been made in which a ball orbits from one to many electrodes. The stability of a slalom orbit has been changed and the path of particles steered with changes in electrode potentials, as well as with effective potential changes caused by the appearance of a nearby particle path. These effects produce the gain in the system by modifying the stability criterion for the propagating particles. Steering of a particle to an alternative path has been caused by both charge change on electrodes and by space charge change from other particle paths. We have thus seen the essential elements-namely, gain, interconnectivity and storage-in this simulator for electrodynamic problems.

We have also seen numerous effects that cause us to ponder before jumping into a large system. We have seen balls stub their toe on a speck of dirt, totally destroying the desired orbit or path. We have seen high-order modes excited in otherwise useful low-order and simple modes, giving rise to a host of side effects that may never be as useful as they are beautiful. There is very often the implication of a degree of complexity in the orbits that I may never understand. When working in air we are either working very near to breakdown potentials at adequate ball velocities or are working at velocities so low that surface imperfections predominate.

In our machine organization studies we are presently in a quandary as to whether to go on to a simulator with 10,000 intersections or abandon the simulator and try real live electrons. Either route will present us with a great many problems.

Whichever route we choose, we should eventually arrive at the point of being able to adapt field-emission devices with their free-electron-emitting capabilities to this method of organization. A few things will have to be added before a system is useful. A regeneration system will be needed to keep a storage ring in the filled state when desired, if indeed this persistent current storage shows any advantages over conventional charge storage for this condensed state or solid component array.

If we succeed in understanding complex electron organizations in condensed state arrays, then we could move on toward replacing the charged wires with point charges such as protons. This will be a large step. The basis for taking such a step has been laid by first being able to form a crystallized array of charged particles in electrodynamic particle confinement apparatus, such as the one used by Wuerker et al., of STL, as shown in Fig. 26. This apparatus is able to confine and support charged particles ranging in size from electrons to several micron-diameter particles using only electrostatic fields. The stability criterion is determined by the magnitude and frequency of the applied dc and ac potentials. We use a similar principle in our quadrupole mass spectrometer, except that the ions are moving at a fairly high drift velocity. As shown in the top picture of Fig. 27, the STL device made it possible to freeze an array of aluminum particles large enough to see by microscopy and thus verify the particle motions. The lower picture in Fig. 27 shows the array being squeezed down in size by changes in confinement field parameters. Figure 28 shows a single particle motion while deep within the region of stability. This confinement apparatus has also contained both ions and electrons simultaneously, giving a visible glow discharge at pressures of 10^{-8} mm Hg. Of course, this discharge indicates excessive disorder or undesired interactions. Our job is to introduce electrons into the ion lattice and promote more organization-organization of the kind that will be a useful data-processing machine.

By learning the laws of organization through fixed structures we may eventually be able to organize plasma structures to the point that they provide enough inherent stability to become their own container.

The number of interactions possible in a plasma system and the speed and energy density of these interactions make it highly desirable to seek a way of organizing them. Nothing would be more desirable to me, as a researcher on intelligent structure organization than to dispense with the need for tediously carving microscopic shapes by taking advantage of almost infinite elasticity and plasticity of plasma structures by organizing our machines in the large and then squeezing the structure down to size by changing the confinement parameters.

I would like to end with a quote by Thoreau, who said:

> "If you have built castles in the air, your work need not be lost; that is where they should be.
> Now put the foundations under them."